Preliminary

Marktech Optoelectronics

Visible Emitter

Product No: **VS409NNM1 - WRC**

Peak Emission Wavelength: 405nm

The 405nm visible emitter series is designed for applications requiring high output and precise optical / mechanical axis alignment. Custom package solutions and sorting are available.

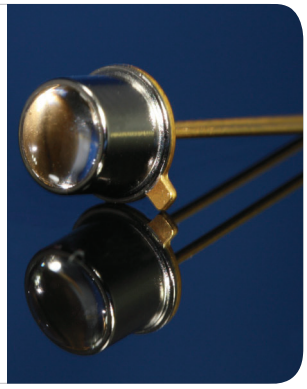

FEATURES

- > Hermetically Sealed TO-46
- > High Output Power
- > Narrow Beam Angle
- > High Reliability

APPLICATIONS

- > Color Sensor / Money Bill
- > Paper Sensor / Money Bill
- > Bar-code Reader

Absolute Maximum Ratings (Ta=25°C)

ITEMS	SYMBOL	RATINGS	UNIT
Forward Current (DC)	IF	50	mA
Forward Current (Pulse)*1	IFP	0.5	A
Reverse Voltage	VR	5	V
Power Dissipation	PD	160	mW
Operating Temperature Range	Topr	-20 ~ +85	°C
Storage Temperature Range	Tstg	-30 ~ +100	°C
Junction Temperature	Tj	100	°C
Lead Soldering Temperature*2	Tls	260	°C

Note*1: Tw=10μsec, T=10msec

Electrical & Optical Characteristics (Ta = 25°C)

ITEMS	SYMBOL	CONDITIONS	MIN	TYP	MAX	UNIT
Power Output	PO	IF=20mA	--	11.7	--	mW
Forward Voltage	VF	IF=20mA	--	3.05	3.2	V
Reverse Current	IR	VR=5V	--	--	100	μA
Peak Emission Wavelength	λp	IF=20mA	--	405	--	nm
Spectral Line Half Width	Δλ	IF=20mA	--	18	--	nm
Half Intensity Beam Angle	Θ	IF=20mA	--	±5	--	deg

2026-06-18

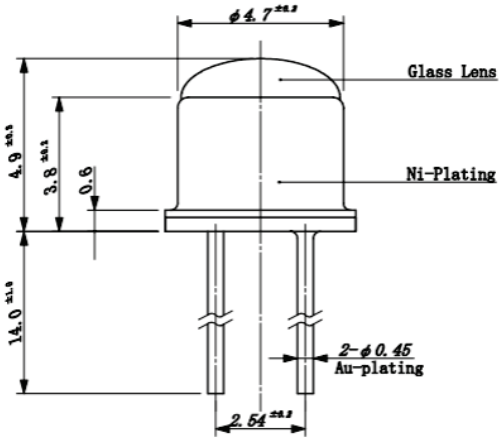

405nm Spectral Response

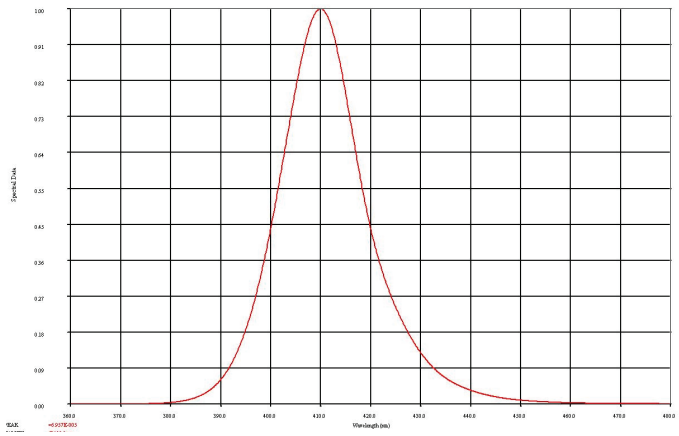

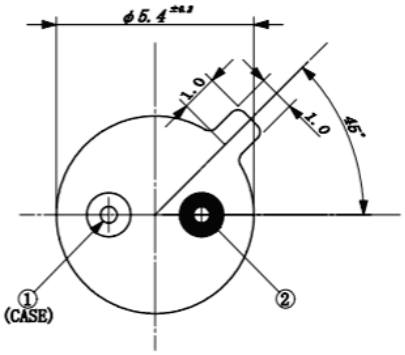

Viewing Angle

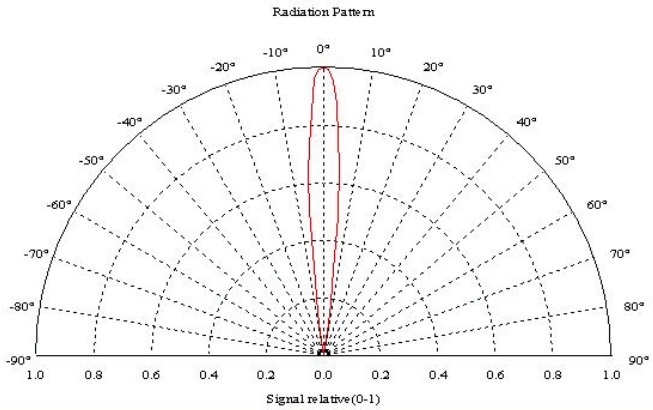

Unit: mm, Tolerance: ±0.2

2026-06-18

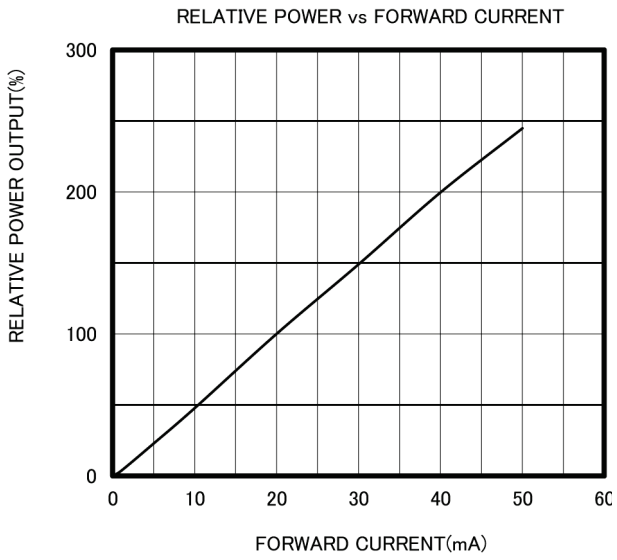

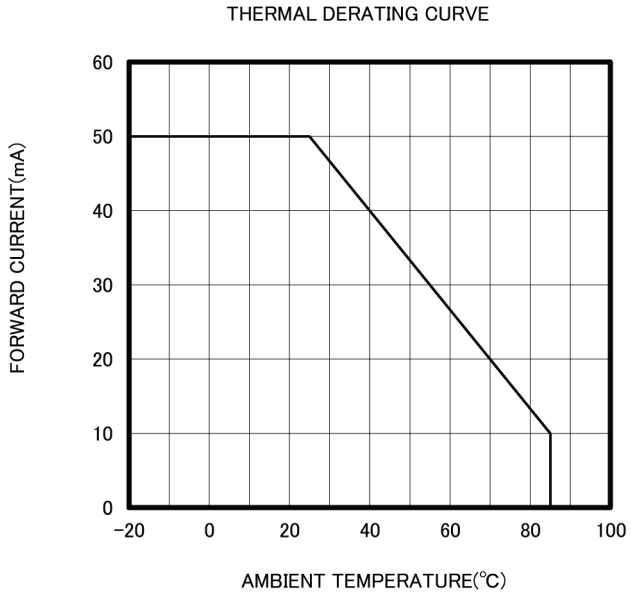

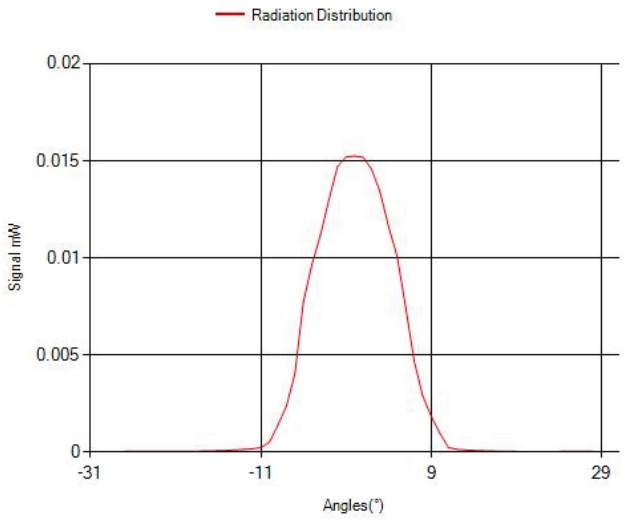

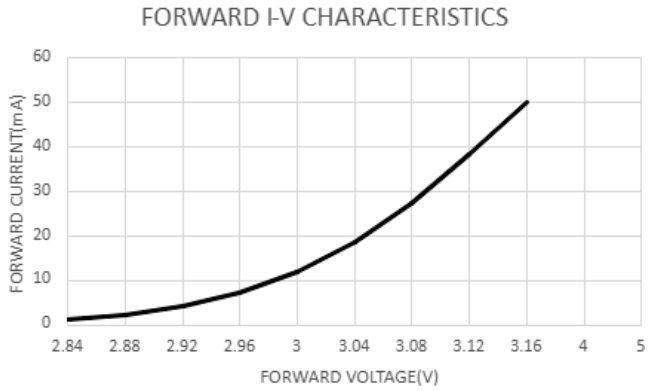

The information contained herein is subject to change without notice.

2026-06-18